Televes®

PicoKom domestic amplifier 2 outputs: VHF/UHF/IF - LTE700 Ready

Domestic amplifier with 2 outputs and terrestrial automatic gain adjustment to extend the terrestrial and satellite television domestic network.
Equipped with LTE700/5G filtering and input power supply for pre-amplifier or BOSS system feeding.

The equipment automatically detects the presence of an LNB management signal on the output (voltage and tone) generated by a receiver, allowing it to reach the input

Ref.	560601
Logical ref.	NV23PICO
EAN13	8424450145104

Packaging info

Box	1 pcs.
Carton	10 pcs.

Physical data

Net weight	188.00 g
Gross weight	188.00 g
Width	89.00 mm
Height	66.00 mm
Depth	26.00 mm
Main product weight	128.00 g

Highlights

- Plug & Play, no adjustments required: equipped with automatic gain regulation, without any impact on signal quality
- Pleasing design and limited size: can be installed in 100 mm x 100 mm connection boxes
- EasyF connection system
- Integrated high-performance switched-mode power supply: reduced power consumption (40% less than a standard amplifier)
- Fully automated manufacturing, subject to the most stringent quality controls
- ON/OFF DC pass switch, for pre-amplifier or BOSS system powering
- Easy mounting, preserving the bending radius of the coaxial cables
- Can be wall-mounted using screws

Discover

EasyF connection system: simplicity and savings

EasyF is an innovative connection concept where the inner conductor of the coaxial cable is directly inserted in the device, thus improving connection reliability. Thanks to the absence of F connectors, the chassis can be reduced and the connection of two cables secured with a a single screw.

- Real time savings: speeding the installation is possible without the need for coaxial cable termination. Furthermore, there is no need for screwing the connectors on the device, which is sometimes difficult when there is little room
- Connection reliability: the clamp holding the cables prevents the coaxial cable to come off
- Cost savings: no additional connectors are required (neither F nor IEC)
- Space optimization: inputs and outputs are always on the same side of the device to prevent coaxial cables from bending, and to make working inside cabinets and register boxes easier
- Very easy three-step mounting: only screwing and unscrewing the covers is required to connect both cables:

1. Unscrew the device's cover to access the connection

2. Insert the previously stripped coaxial cables

3. Close the cover and screw to ensure connection

Learn more about EasyF system reliability

With EasyF, the connection between the coaxial cable and the device is carried out using an automated system for contact insertion of the inner conductor, without any soldering.

- Always as new: the device's operating life increases when the factor of solder wearing out with time is removed
- Failure rate reduction: usually produced as a result of cold soldering joints
- Electromagnetic behaviour optimization: for high frequencies
- Our commitment with environment is reinforced: pollution caused by the welding process is eliminated and production power consumption is reduced

Application example

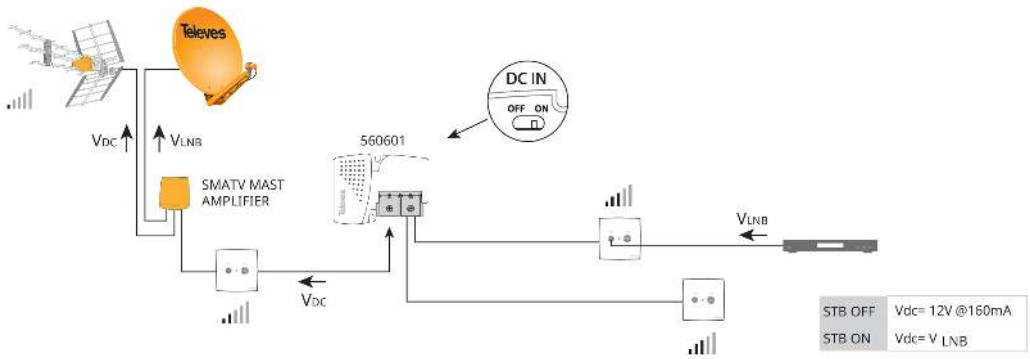

Televes®

Technical specifications : Ref. 560601

Number of outputs		2	
Frequency range	MHz	47 ... 694	950 ... 2150
Gain	dB	12	23
Automatic gain range	dB	0 ... 20	--
Output level DIN45004B	dBmV	43	--
Output level EN60728-3 IMD3 2tones -35dB	dBmV	50	46
Output level 10Ch DVB-T	dBmV	32	--
Output level 2CH DBV-T	dBmV	31	--
Noise figure	dB	5	4
Powering per inputs	Vdc	12	
Max current input	mA	150	
Input voltage	Vac	220 ... 230	
Mains frequency		50 Hz / 60 Hz	
Max. current	mA	30	
Max. power consumption	W	3.7	
Operating temperature	°F	23 ... 113	
Protection index (IP)		20	